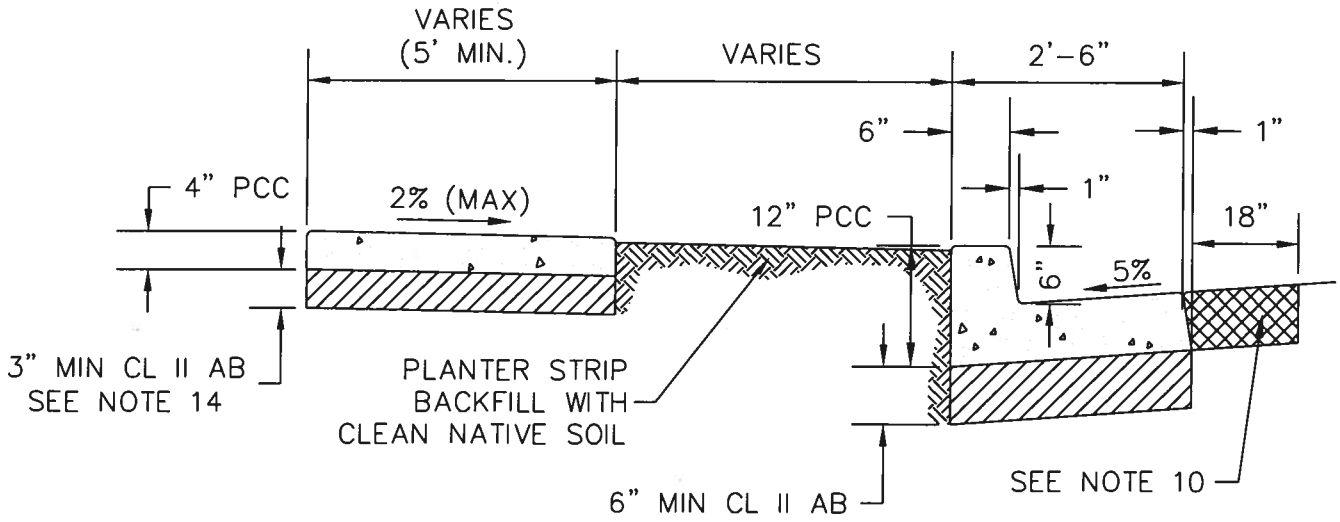

DETACHED SIDEWALK WITH TYPE "A" CURB AND GUTTER

N.T.S.

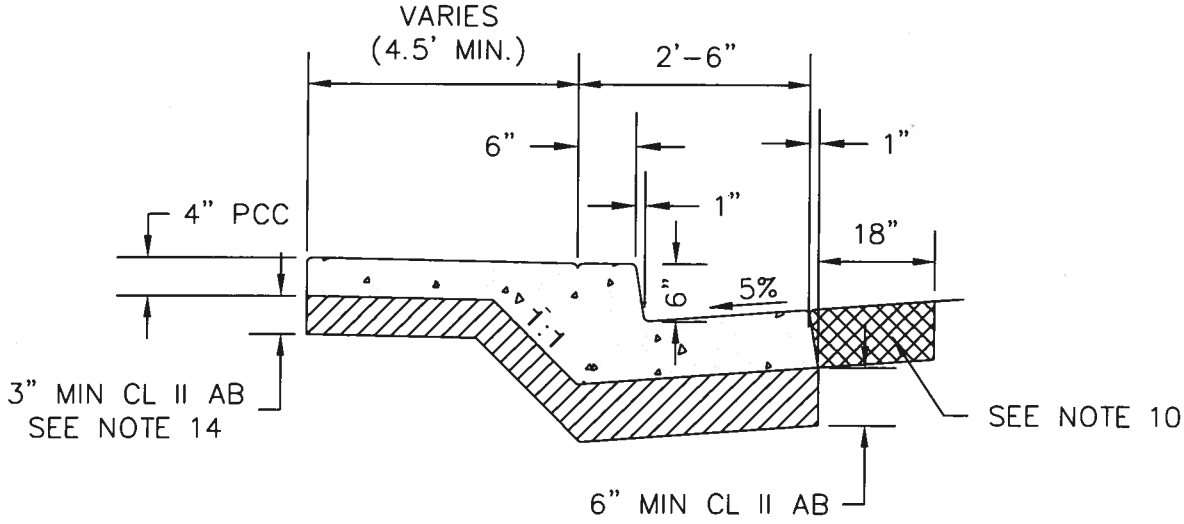

MONOLITHIC SIDEWALK WITH TYPE "A" CURB AND GUTTER

N.T.S.

REGISTERED PROFESSIONAL ENGINEER
EDRIC W.H. KWAN
No. 62829
Expires 6-30-12
CIVIL
STATE OF CALIFORNIA

CITY OF RICHMOND ENGINEERING SERVICES DEPARTMENT

STANDARD PLAN

APPROVED BY:

EDRIC KWAN CITY ENGINEER

SIDEWALK, CURB AND GUTTER

DATE: SEPTEMBER 2010	DRAWN:	CHECK:	SHEET NO.	DRAWING NO.
REVISED:	GAR	EK	1 OF 5	ST-1A